START
DESIGN + ENGINEERING
GROHE GERMANY

99.0641.031/ÄM 236159/04.16

www.grohe.com

Pure Freude an Wasser

GROHE

30 307

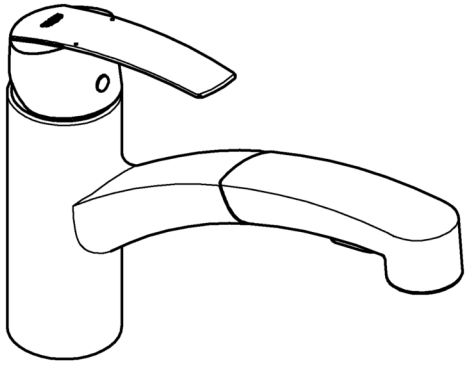

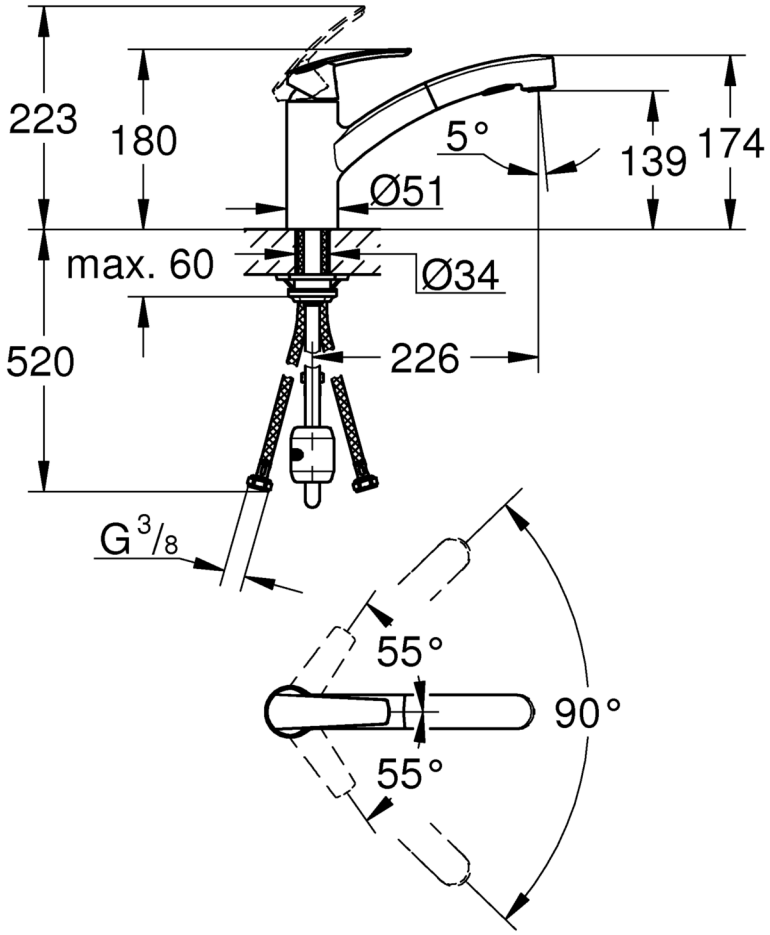

1

2 - 3

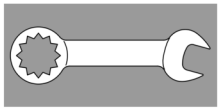

4

5

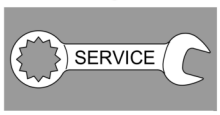

6

7

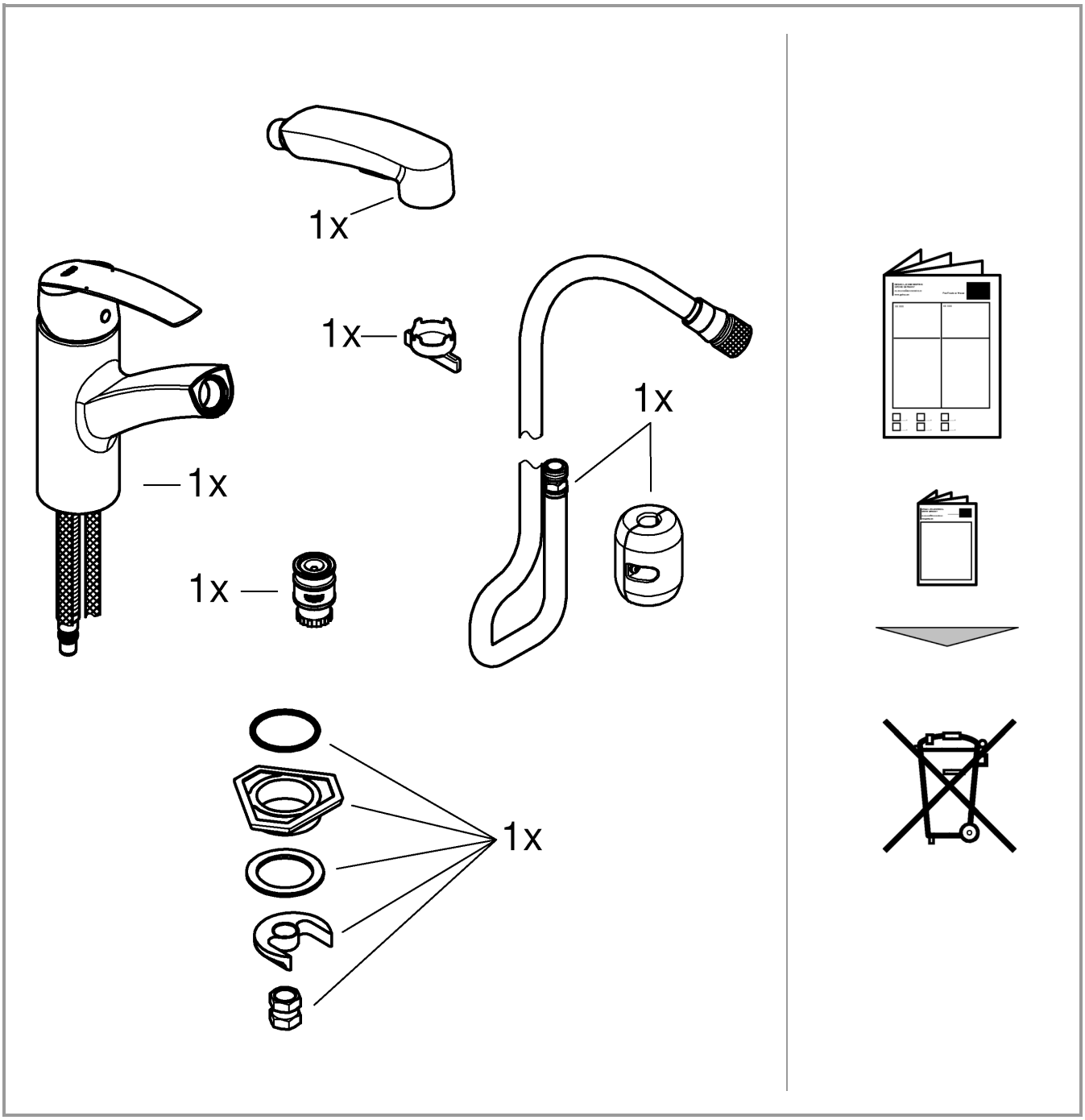
1x
1x
1x
1x
1x
1x

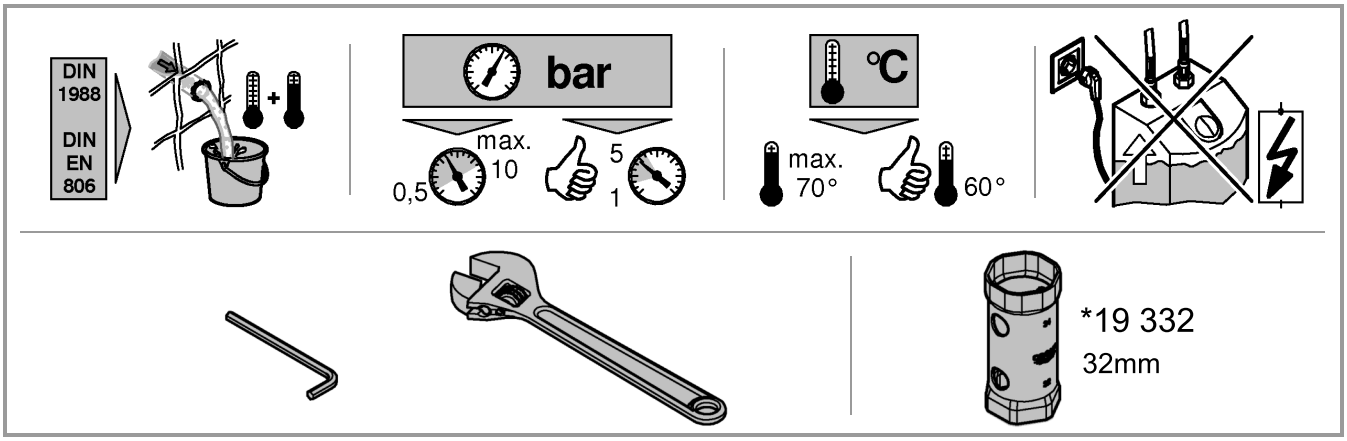
DIN 1988
DIN EN 806
bar
max. 10
0,5
5
1
°C
max. 70°
60°
*19 332
32mm

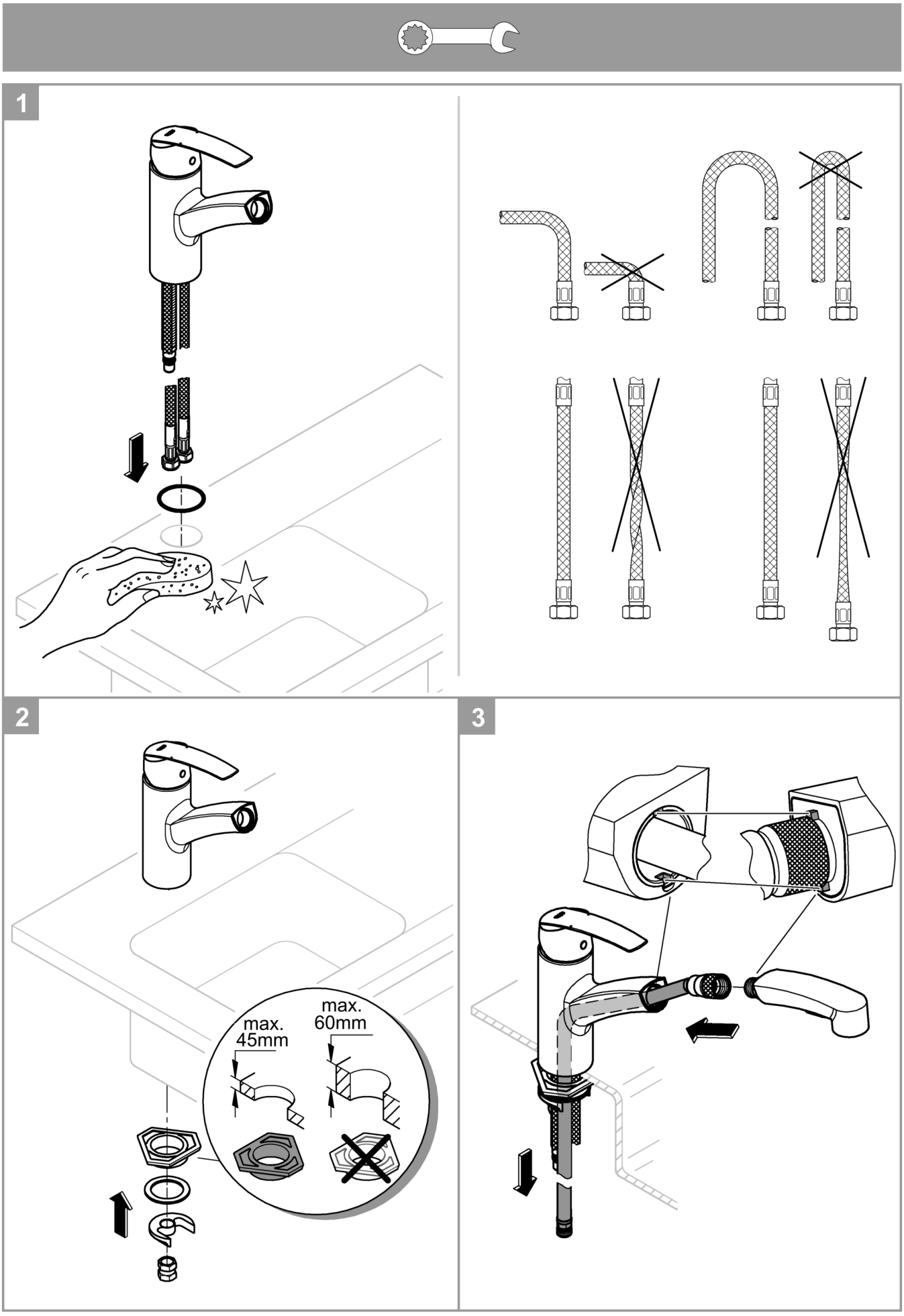
1
2
max.
45mm
max.
60mm
3

4

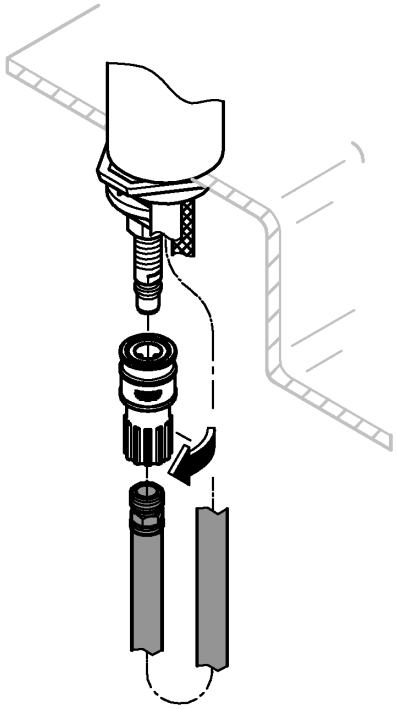

5

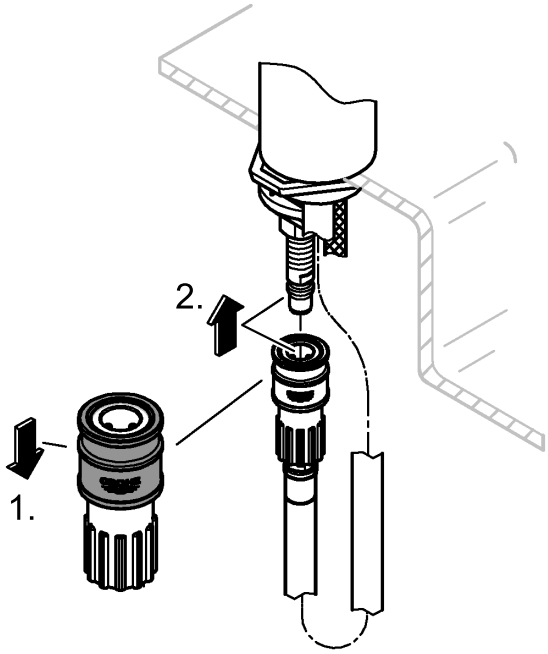

6

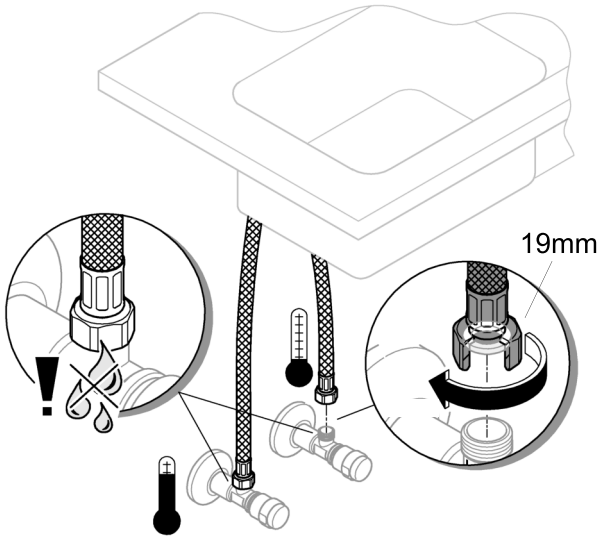

7

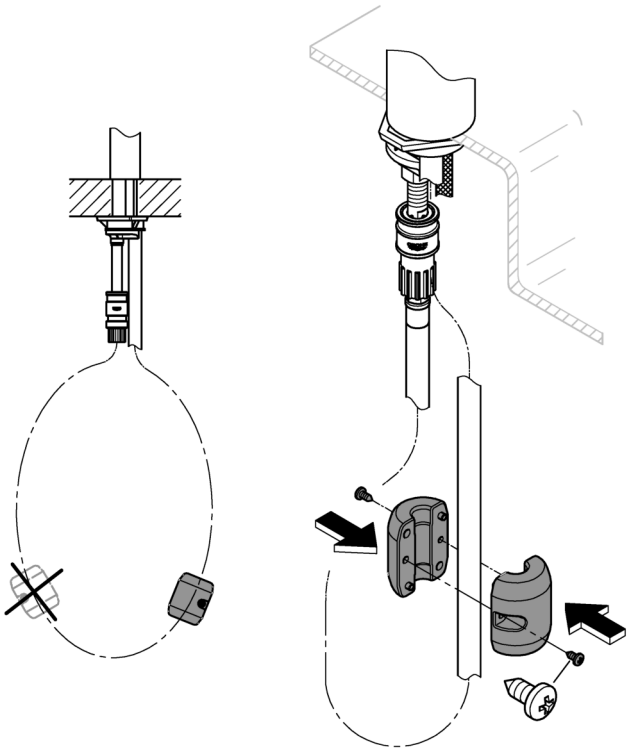

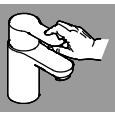

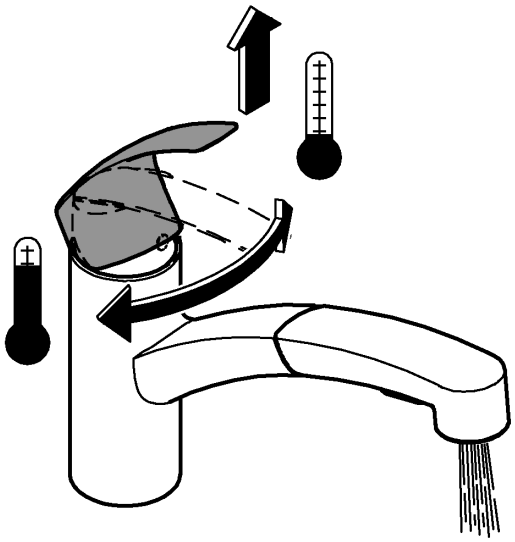

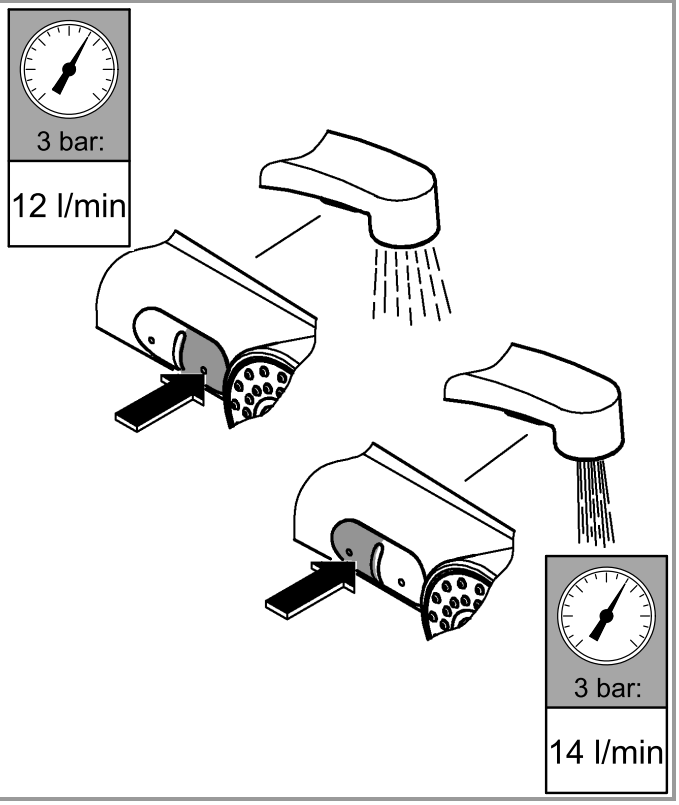
3 bar:
12 l/min
3 bar:
14 l/min

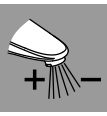
+
–

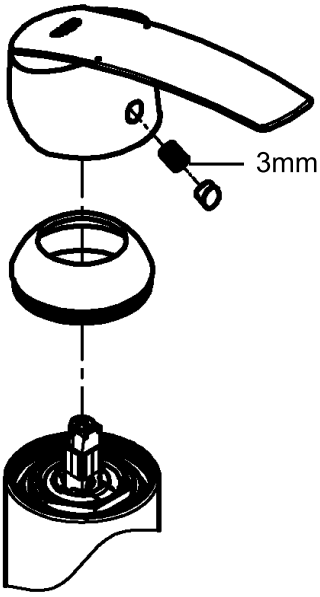
3mm

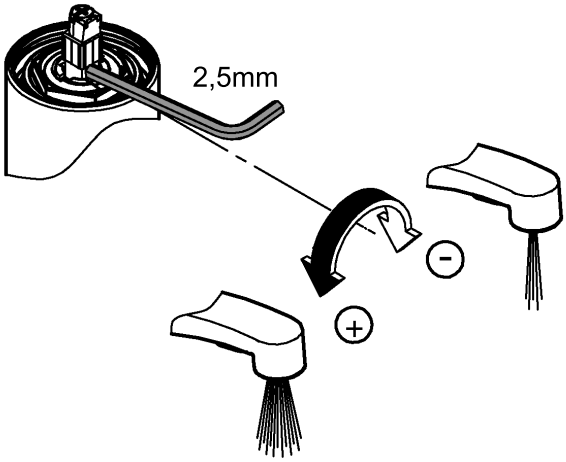
2,5mm
–
+

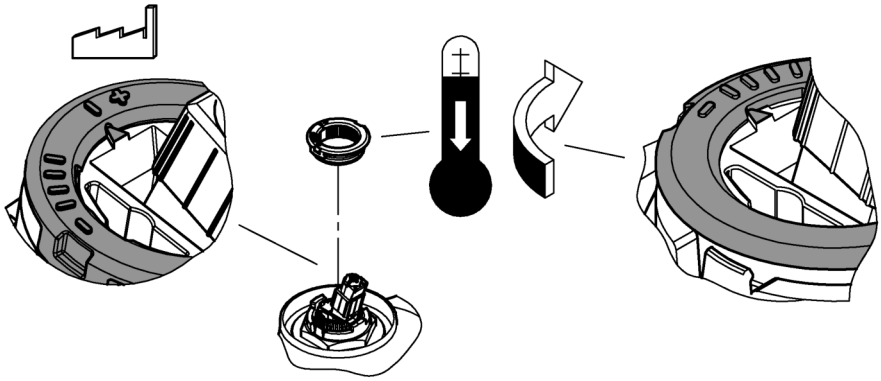

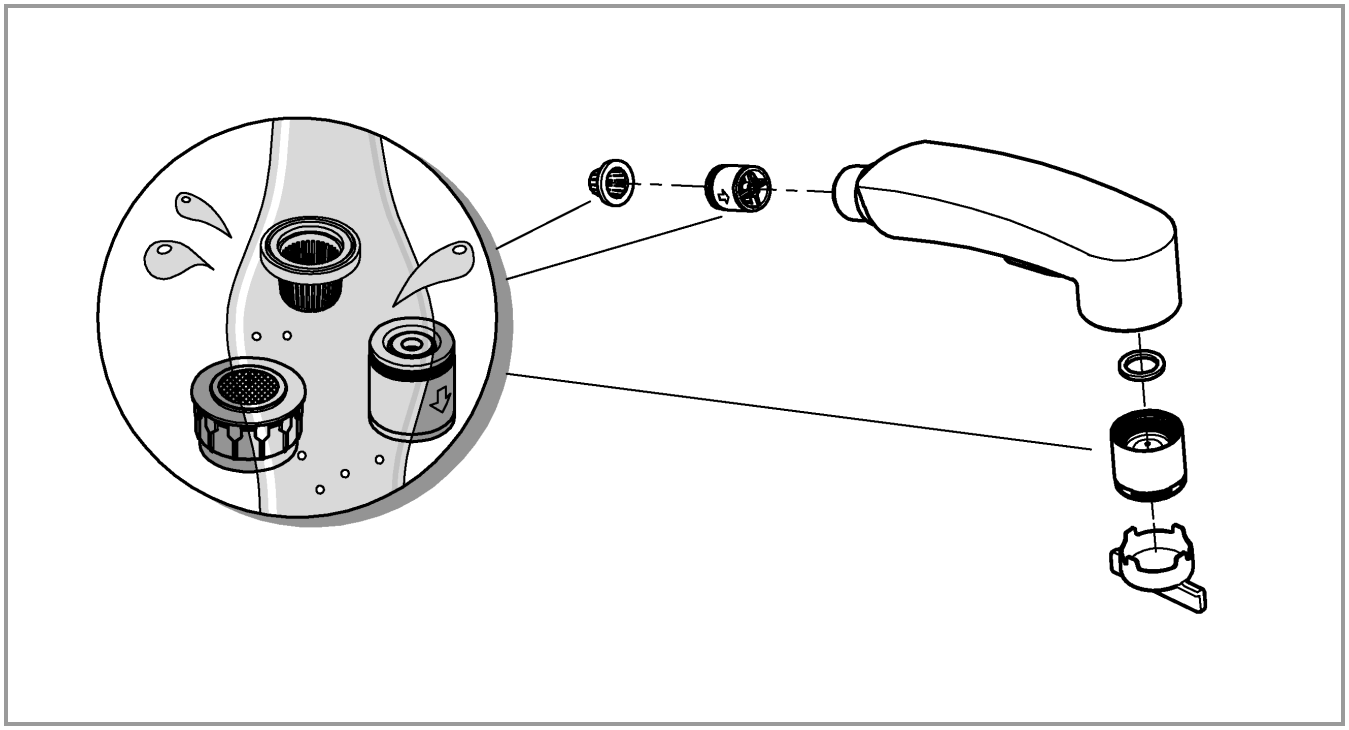

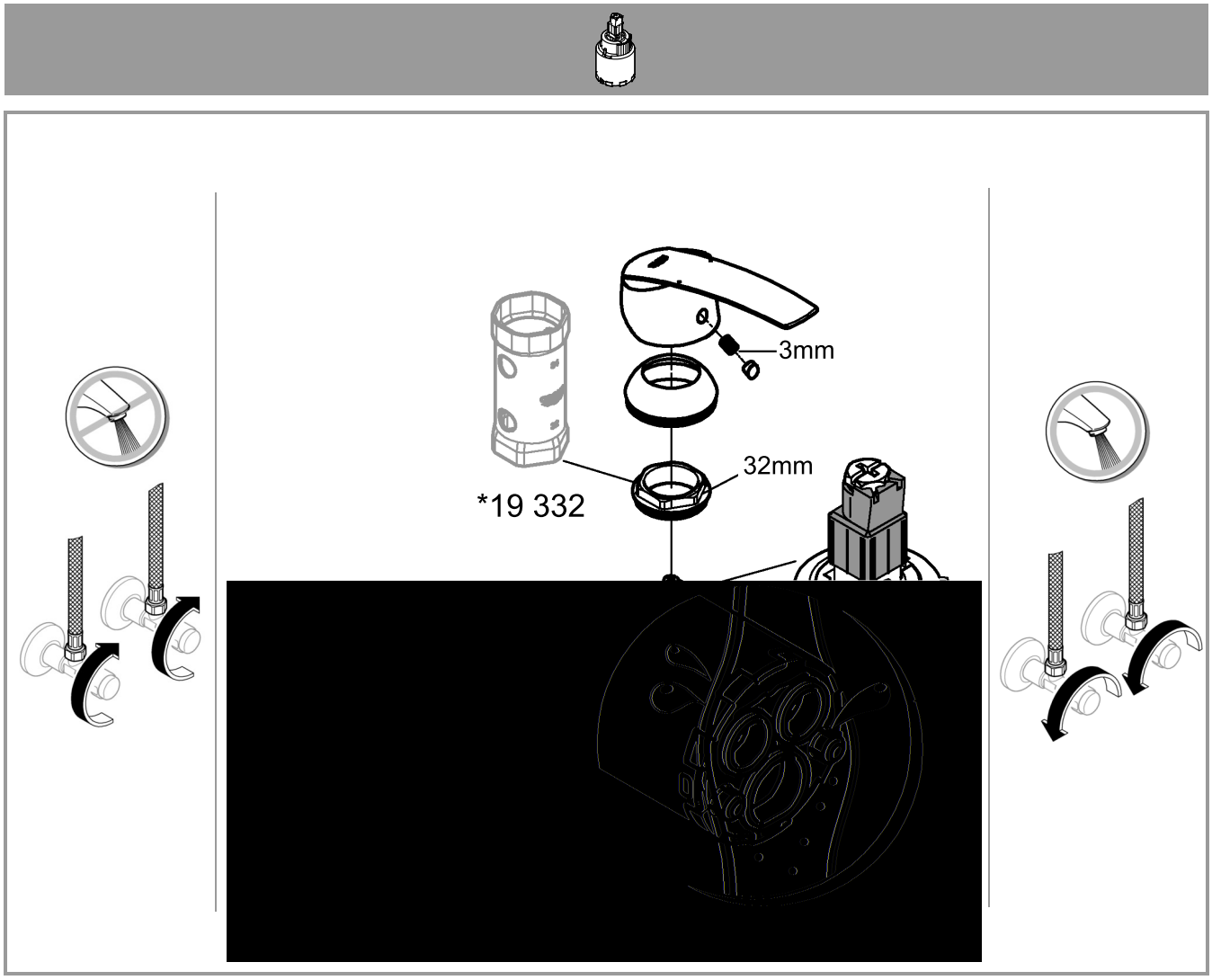
3mm
32mm
*19 332

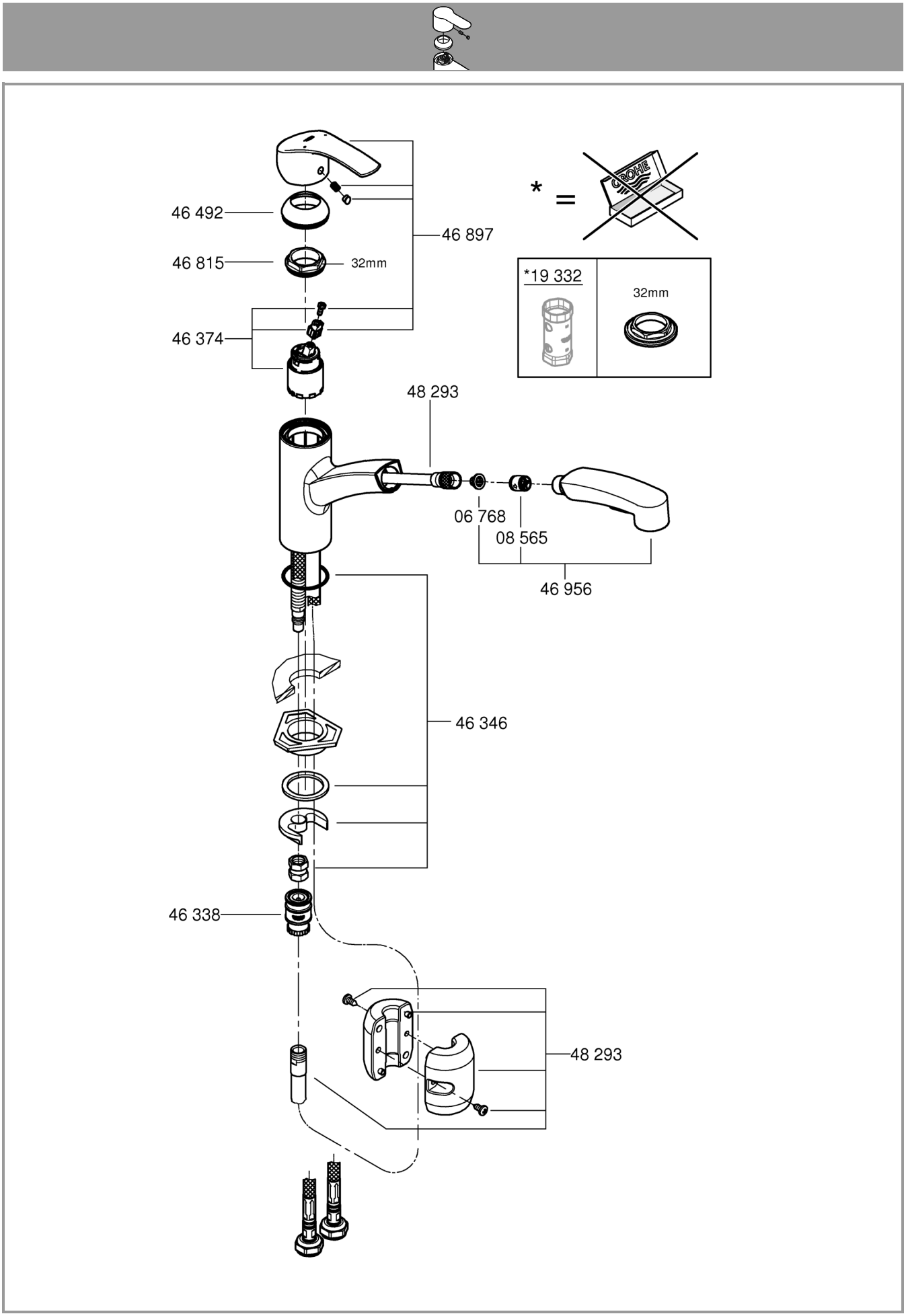
46 492
46 897
46 815
32mm
46 374
*
=
*19 332
32mm
48 293
06 768
08 565
46 956
46 346
46 338
48 293

Pure Freude an Wasser

GROHE

D
✆ +49 571 3989 333
impressum@grohe.de

A
✆ +43 1 68060
info-at@grohe.com

AUS
Argent Sydney
✆ +(02) 8394 5800
Argent Melbourne
✆ +(03) 9682 1231

B
✆ +32 16 230660
info.be@grohe.com

BG
✆ +359 2 9719959
grohe-bulgaria@grohe.com

CAU
✆ +99 412 497 09 74
info-az@grohe.com

CDN
✆ +1 888 6447643
info@grohe.ca

CH
✆ +41 448777300
info@grohe.ch

CN
✆ +86 21 63758878

CY
✆ +357 22 465200
info@grome.com

CZ
✆ +420 277 004 190
grohe-cz@grohe.com

DK
✆ +45 44 656800
grohe@grohe.dk

E
✆ +34 93 3368850
grohe@grohe.es

EST
✆ +372 6616354
grohe@grohe.ee

F
✆ +33 1 49972900
marketing-fr@grohe.com

FIN
✆ +358 10 8201100
teknocalor@teknocalor.fi

GB
✆ +44 871 200 3414
info-uk@grohe.com

GR
✆ +30 210 2712908
nsapountzis@ath.forthnet.gr

H
✆ +36 1 2388045
info-hu@grohe.com

HK
✆ +852 2969 7067
info@grohe.hk

I
✆ +39 2 959401
info-it@grohe.com

IND
✆ +91 124 4933000
customercare.in@grohe.com

IS
✆ +354 515 4000
jonst@byko.is

J
✆ +81 3 32989730
info@grohe.co.jp

KZ
✆ +7 727 311 07 39
info-cac@grohe.com

LT
✆ +372 6616354
grohe@grohe.ee

LV
✆ +372 6616354
grohe@grohe.ee

MAL
✆ +1 800 80 6570
info-singapore@grohe.com

N
✆ +47 22 072070
grohe@grohe.no

NL
✆ +31 79 3680133
vragen-nl@grohe.com

NZ
✆ +09/373 4324

P
✆ +351 234 529620
commercial-pt@grohe.com

PL
✆ +48 22 5432640
biuro@grohe.com.pl

RI
✆ +62 21 2358 4751
info-singapore@grohe.com

RO
✆ +40 21 2125050
info-ro@grohe.com

ROK
✆ +82 2 559 0790
info-singapore@grohe.com

RP
✆ +63 2 8041617

RUS
✆ +7 495 9819510
info@grohe.ru

S
✆ +46 771 141314
grohe@grohe.se

SGP
✆ +65 6 7385585
info-singapore@grohe.com

SK
✆ +420 277 004 190
grohe-cz@grohe.com

T
✆ +66 2610 3685
info-singapore@grohe.com

TR
✆ +90 216 441 23 70
GroheTurkey@grome.com

UA
✆ +38 44 5375273
info-ua@grohe.com

USA
✆ +1 800 4447643
us-customerservice@grohe.com

VN
✆ +84 8 5413 6840
info-singapore@grohe.com

AL BiH HR KS ME MK SLO SRB
✆ +385 1 2911470
adria-hr@grohe.com

Eastern Mediterranean, Middle East - Africa Area Sales Office:
✆ +357 22 465200
info@grome.com

IR OM UAE YEM
✆ +971 4 3318070
grohedubai@grome.com

Far East Area Sales Office:
✆ +65 6311 3600
info@grohe.com.sg

www.grohe.com
2014/03/21